MASK+





Wall sconce series. Fixtures consist of:

- Multi-step powder-coat painting process, optimized against UV rays and corrosion.
- Copper-free precision die-cast aluminum housing and mounting plate.
- Frosted, flat, tempered silk-screened soda-lime glass diffuser.
- Custom molded, anti-aging gasket(s).
- Stainless steel external hardware.
- Custom MCPCB utilized to maximize heat dissipation and promote a long LED life.
- Single (M) or dual (B) light emission.
- IESNA Type V light distribution.
- DarkSky approved when ordered with single light emission only, and in 3000K or below.
- Input voltage: 120-277 V (50 / 60 Hz), integral 0-10 V dimming driver.
- Rectangular mounting plate included (for use RACO 8660 or equivalent); 4" tall accessory plate for use with larger junction box applications available (order separately).
- Consult factory for dimming options, custom finishes, and non-cataloged CCT (Kelvin) options.
- 5-year warranty.
- Marine Grade finish.
- Suitable for Natatorium applications.

IP 65 · WET · cULus LISTED · FULL CUT OFF · 0-10 V · IK 06 1 J

Finishes

- **AN-96** / Iron gray / Textured
- **WH-87** / White / Textured
- **BK-81** / Black / Textured
- **GR-94** / Aluminum metallic / Textured
- **RB-10** / Iron rust / Textured

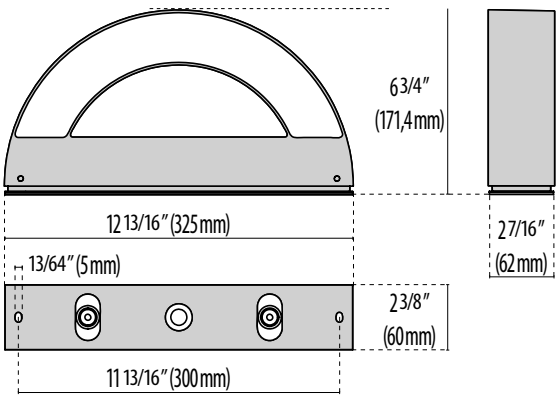

MASK+

LUMEN OUTPUT	3000K	4000K
MASK+ M 12.5W	914	971
MASK+ B 24W	1770	1879

Scan here for installation Instructions

Performance in Lighting reserves the rights to make all necessary changes without prior notice.

Performance in Lighting - 2621 Keys Pointe - Conyers, Georgia 30013 - USA - voice 770.822.2115 - info.usa@pil.lighting
www.performanceinlighting.com

Rev. 09/24/2026

Order Guide - MASK+

Order code example	MSK-M-12.5W-3K-AM-UNV-010V-JBOX

Series	Housing Style	Wattage	CCT	Finish	Voltage	Dimming	Options/ Accessories
MSK Mask+	**M** One-way **B** Two-way	**12.5W** 12.5 watt (M-max) **24W** 24 watt (B-max)	80 CRI std. **3K** 3000k **4K** 4000k	**AM** Aluminum Metallic **IG** Iron Gray **IR** Iron Rust **BK** Textured Black **WH** Textured White **CC** Custom Color	**UNV** 120-277V	**010V** 0-10V Dimming Driver **ELV** 120V Line-dimming	**JBOX** 4-Inch tall Jbox Cover

CONSULT FACTORY FOR OTHER AVAILABLE OPTIONS NOT SHOWN ABOVE

INCLUDED ACCESSORIES

DESCRIPTION	FINISH	PART NUMBER
MASK+		
4-inch tall accessory Jbox cover plate		3101273
4-inch tall accessory Jbox cover plate		3101309

